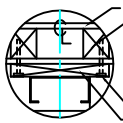

NOTE:
WHEN STUD AND SHEETROCK CONSTRUCTION IS USED ON THE GUIDE RAIL SUPPORT WALL 4"x4" STUDDING IS NEEDED BEHIND THE 2"x12" PLANK FOR SUPPORT.

DETAIL "A"

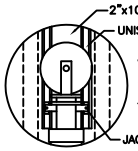

NOTE:
JACK SHEAVE GUIDE MUST BE INSTALLED PARALLEL TO MAIN GUIDE RAIL. PLUMB w/ JACK ON INSTALLATION. UNISTRUT TO BE FASTENED TO THE SUPPORT PLANK EVERY 3'-0".

DETAIL "B"

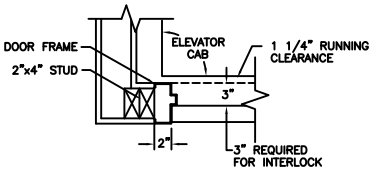

DOOR FRAME DETAIL

WORK NOT INCLUDED IN ELEVATOR CONTRACT

Shaft construction is to comply with state and local building codes.

1. 220 volt 1 phase 30 amp service to be piped and wired to a disconnect provided and installed by the Elevator Contractor.
2. 120v. circuit breaker box per N.E.C. 620.51 with 20 amp S.P.S.T. breakers (1 per car) located in machine room for car lights.
3. Telephone circuit with junction box by customer.
4. Light switch for machine room light and 110v. outlet.
5. Controller must be located per N.E.C. requirements with 3 ft. clear work space in front of cabinet.
6. 30 amp disconnect fuse to be provided by owner.
7. G.C. to supply and install the 2"x12" plank for the main guide rail, the 2"x8" support plank for the #10 pulley plumb and square, 2"x4" studding (IS REQUIRED IN SHAFT) (2) and stabilizer angle (IS REQUIRED) (2) (TYPICAL) (ANCHOR), 2'-0" O.C. AT EDGES. COUNTERSINK LAGS. START PLANK 4" FROM PIT FLOOR AND EXTEND TO CEILING.

TECHNICAL DATA:
1. REACTIONS ON ALL SHEAVES AND MOUNTINGS
   STATIC = 1,350 LBS.
   IMPACT = 2,700 LBS.
2. RAIL FASTENING TO 2"x12" PLANK
   #14 x 1 3/4" TYPE A S.M.S. RAIL IS PRE-DRILLED AT FACTORY.
3. BOLT FASTENING OF CAR TO TROLLEY
   1/2" – 13 x 4" SOCKET HD CAP SCREWS

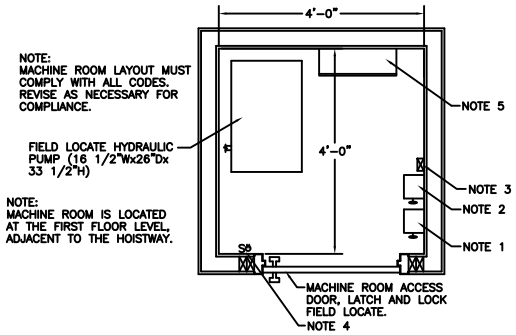

NOTE:
MACHINE ROOM LAYOUT MUST COMPLY WITH ALL CODES. REVISE AS NECESSARY FOR COMPLIANCE.

FIELD LOCATE HYDRAULIC PUMP (16 1/2"Wx26"Dx 33 1/2"H)

NOTE:
MACHINE ROOM IS LOCATED AT THE FIRST FLOOR LEVEL, ADJACENT TO THE HOISTWAY.

MACHINE ROOM PLAN

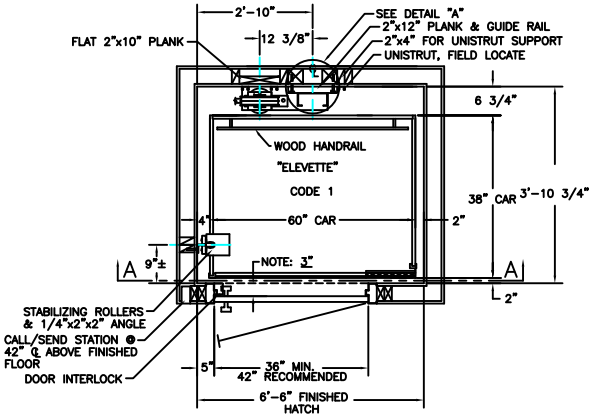

SHAFT PLAN

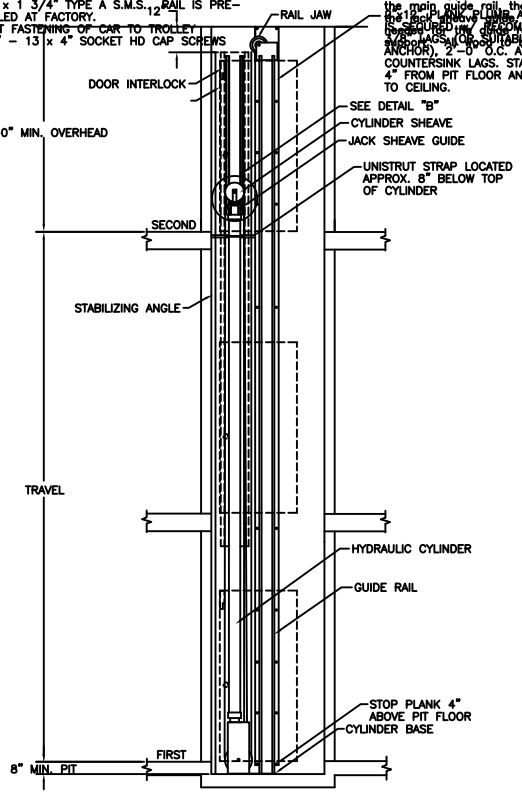

SECTION A–A

ELEVATOR READY INC.
ELEVATORS FOR THE HOME

SHOP DRAWING NAME

ARCHITECT

GENERAL CONTRACTOR

EQUIPMENT INSTALLED BY:
ELEVATOR READY INC.
5060 RITTER ROAD
MECHANICSBURG, PA.17055
717–697–3780

SPECIFICATIONS

3 LANDING
HYDRA RIDE II
"ELEVETTE"

CAR 38"Dx60"Wx80"
CODE(S) 1
CAPACITY 750 LBS. AT 30 F.P.M. ±4
2 CABLES 13,200 LBS. T.S. IMP PLOW STEEL 3/8" x 8 x 19 IWRC

CAR CONSTRUCTION:
COLOR/PANEL SELECTION:

- ☒ ALL DOORS INTERLOCKED – EM7
- ☐ TOP OUTLET JACK
- ☐ JACK SPLICE
- ☐ PHONE CORD
- ☐ PHONE BOX –☐ BRASS ☐ STAINLESS
- ☐ FLOATING GATE
- ☐ COLLAPSIBLE GATE FINISH –
- ☐ GATE SAFETY BAR
- ☐ D.A. GATE LOCK
- ☐ ACCORDIAN FOLD GATE
- ☐ CAR CONTROL PLATE FINISH –
- ☐ REMOTE PLATES FINISH –
- ☐ C.O.P. HEIGHT –☒ STD. ☐ WHEELCHAIR
- ☐ LIGHTED BUTTONS
- ☐ IN USE LIGHT
- ☐ ARRIVAL LIGHTS
- ☐ KEYSWITCH IN CAR
- ☐ STANDARD ALARM
- ☐ EMERGENCY LIGHT AND BELL
- ☐ CONSTANT PRESSURE
- ☐ DOOR OPEN ALARM
- ☐ HOMING DEVICE
- ☐ LAMP FIXTURE – NORA, STANDARD
- ☐ AUTO CAB LIGHT
- ☐ HANDRAIL – WOOD
- ☐ VINYL FLOOR
- ☐ STABILIZER
- ☐ HALF TROLLEY
- ☐ SOLID STOP
- ☐ BUFFER SPRING ☐6" ☐12"

NOTES:
1. NOTICE TO ELECTRICAL CONTRACTOR:
   BRING 4 #10 WIRES TO DISCONNECT SWITCH; (2)110, (1)NEUTRAL, (1)GROUND.
   2 1/2 H.P. MOTOR 220 VOLTS 1 PHASE
   60 CYCLE
   F.L.A. 10
   30 AMP MAIN LINE FUSE
2. NOTICE TO G.C.
   ALL HOISTWAY AND MACHINE ROOM CONSTRUCTION MUST COMPLY WITH NATIONAL, STATE, AND LOCAL CODES. PLEASE ADVISE INCOA OF ANY CHANGES NEEDED TO THE DRAWING FOR COMPLIANCE IN YOUR AREA.
3. SWING TYPE SHAFT DOORS BY OTHERS.
4. NOTICE TO ELEVATOR CONTRACTOR OR HIS REPRESENTATIVE:
   ALL ELECTRICAL WIRING MUST BE DONE BY A JOURNEYMAN MECHANIC AND MUST MEET NATIONAL, STATE, AND LOCAL CODES.

INCOA JOB #
DEALER P.O. #
DRAWING BY: CHANCE
DATE:

DRAWING IDENTIFICATION NUMBER

H2_C1_38X60_3LA